Data-Driven Robust Controller for Artificial Pancreas

CyberCardia Meeting @Stony Brook 4/22/2016

Data-Driven Robust Controller for Artificial Pancreas

Motivation: Artificial Pancreas

Diabetes patient

- Lack of insulin production
- Cannot control blood glucose level
- ↓insulin -> ↑glucose

Artificial pancreas

- Monitor glucose level
- Inject insulin if needed

Data-Driven Robust Controller for Artificial Pancreas

Related work: Controller

- [Hovorka 04] – Nonlinear model predictive control of glucose concentration in subjects with type 1 diabetes
- [Dalla 07] – Model Predictive Control of Type 1 Diabetes: An in Silico Trial

Model Predictive Controller

- Predictions based on the model and control accordingly

Why?

- Anticipate future events – predictive power
- Optimize a finite time-horizon, only implementing current timeslot
- Model time delay

Data-Driven Robust Controller for Artificial Pancreas

Challenge: Robustness

Robustness against uncertainty

- Event uncertainty
- Model uncertainty

More on these later!

Optimization & Verification

- Previous Talk:
  - Composition of Heart Model and Device (controller) Model
  - Property expressed in Logic
  - Verification
- Model-Based Falsification of an Artificial Pancreas Control System
  - Composition of Physiological insulin-glucose regulatory Model and Device (controller) Model
  - Property expressed in Logic
  - Falsification tools to find the least robust trace
- This work
  - Patient's insulin-glucose model
  - Develop a controller to achieve some objective (optimization according to some "cost" function)

Artificial Pancreas & Taxi dispatcher

- Components: Model Predictive Control + Data + Robustness

- Previous works on Taxi Dispatch Problem [Fei Miao, Shan Lin, et al]
  - Robust Taxi Dispatch under Model Uncertainties (CDC 2015)
  - Data-Driven Robust Taxi Dispatch under Demand Uncertainties (TCST 2016 / ICCPS 2016 Poster)
  - Taxi Dispatch with Real-time Sensing Data in Metropolitan Areas: A Receding Horizon Control Approach (ICCPS 2015 / TASE 2016)

Data Driven Robust Taxi Dispatch under Demand Uncertainties

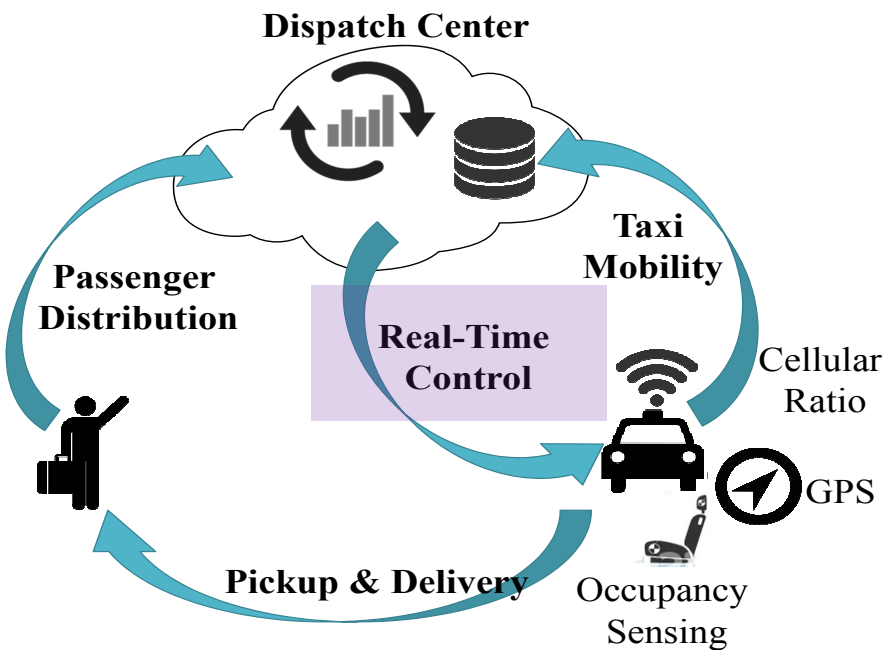

Spatial-temporally correlated demand uncertainties

Predictive Demand

Sensing data of taxis

Real time location

Robust MPC for Global Taxi Dispatch with Demand Uncertainty Set

Current and anticipated future cost

Balanced supply and service fairness

Minimum idle distance to meet demand

$$\mathcal{U}_\epsilon^M(r_c) = \left\{ r_c \in \mathbb{R}^{\tau n} : \hat{r}_{c,i}^{(N-s+1)} \leqslant r_{c,i} \leqslant \hat{r}_{c,i}^{(s)} \right\}$$

Taxi Dispatch as Optimization

$$\begin{aligned}
J &= \sum_{k=1}^{\tau} \left(J_D(X^k) + \beta J_E(X^k, r^k) \right) \\
&= \sum_{k=1}^{\tau} \sum_{i} \left(\sum_{j} X_{ij}^k W_{ij} + \frac{\beta r_i^k}{(\mathbf{1}_n^T X_{\cdot i}^k - X_{i\cdot}^k \mathbf{1}_n + L_i^k)^\alpha} \right) \\
\text{s.t.} \quad & (L^{k+1})^T = (\mathbf{1}_n^T X^k - (X^k \mathbf{1}_n)^T + (L^k)^T) P^k, \\
& \mathbf{1}_n^T X^k - (X^k \mathbf{1}_n)^T + (L^k)^T \geqslant 1, \\
& X_{ij}^k W_{ij} \leq m X_{ij}^k, \\
& X_{ij}^k \geq 0, \quad i, j \in \{1, 2, \ldots, n\}.
\end{aligned} \tag{11}$$

Data Driven Robust Artificial Pancreas under Patient Uncertainties

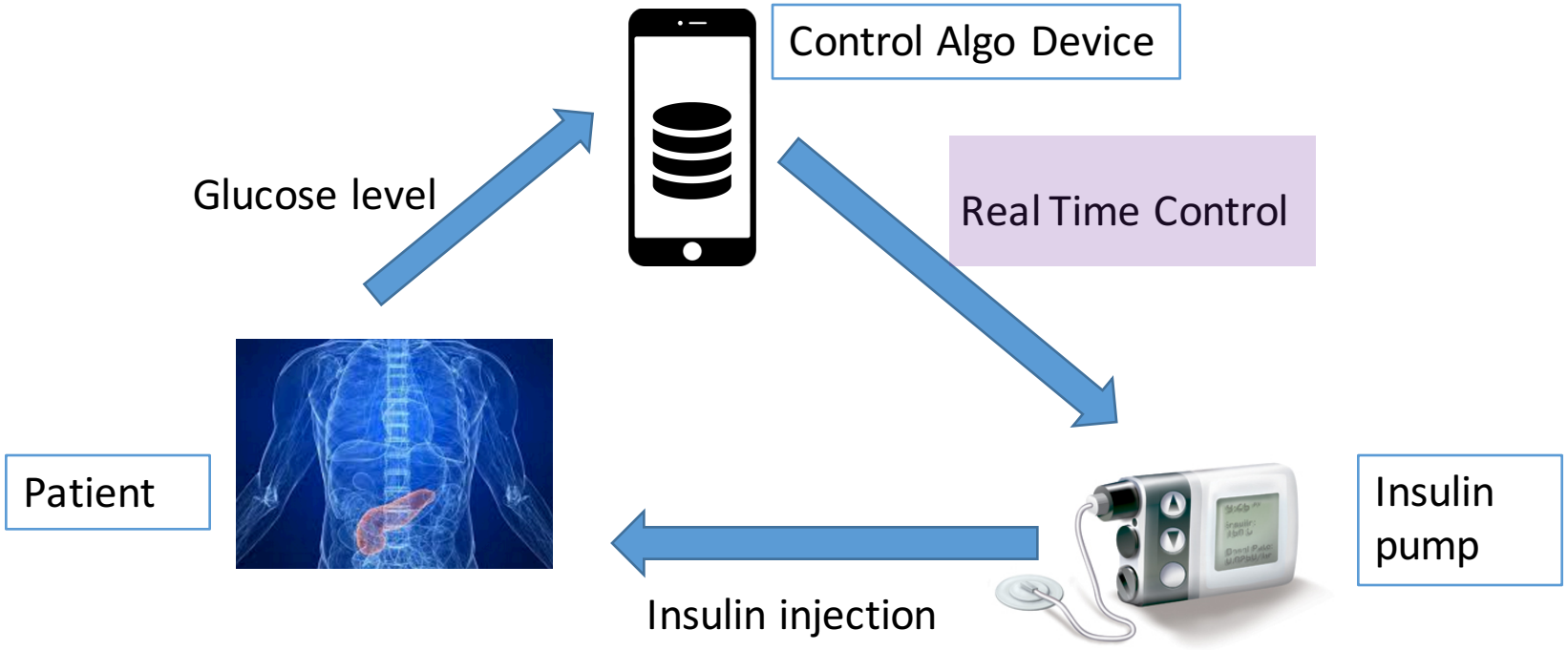

Patient-specific uncertainties

Model parameters

Sensing data of glucose

Glucose level

Robust MPC for Insulin Injection with Uncertainty Set

Meet patient safety requirement

Small variance of glucose level

Fast response to meal and exercise events

Artificial Pancreas Controller as Optimization

- Cost function J depends on glucose level:

$$J(< g_1, \dots, g_T >)$$

- Insulin-glucose model M with uncertainty D:

$$< g_1, \dots, g_T > = M(< i_1, \dots, i_T >, D)$$

- Decision problem:

$$< \mathrm{i}_1^*, \dots, \mathrm{i}_T^* > = \min_{<i_1,\dots,i_T>} J(\, M(< i_1, \dots, i_T >, D)\,)$$

Insulin amount

i_t	Insulin level at time t
g_t	Glucose level at time t
M	Patient model
D	Model uncertainty
J	Cost function
T	Prediction horizon

Artificial pancreas model

Model Name	Type	#Variables
Bergman 71	Nonlinear	3
Hovorka 04	Nonlinear	11
Dalla 07	Nonlinear	10

Model – Glucose & Insulin subsystem

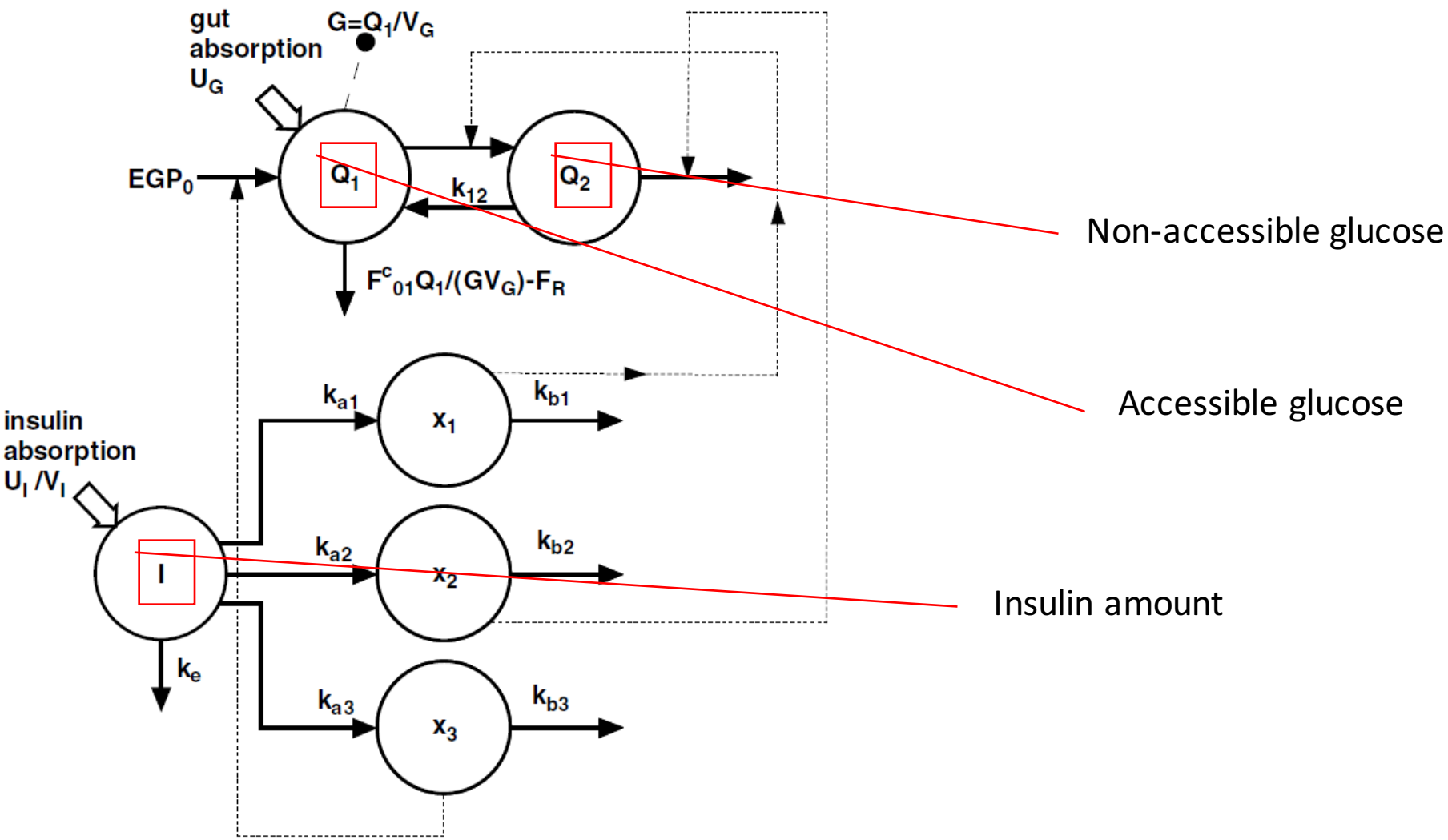

Model – Insulin action subsystem

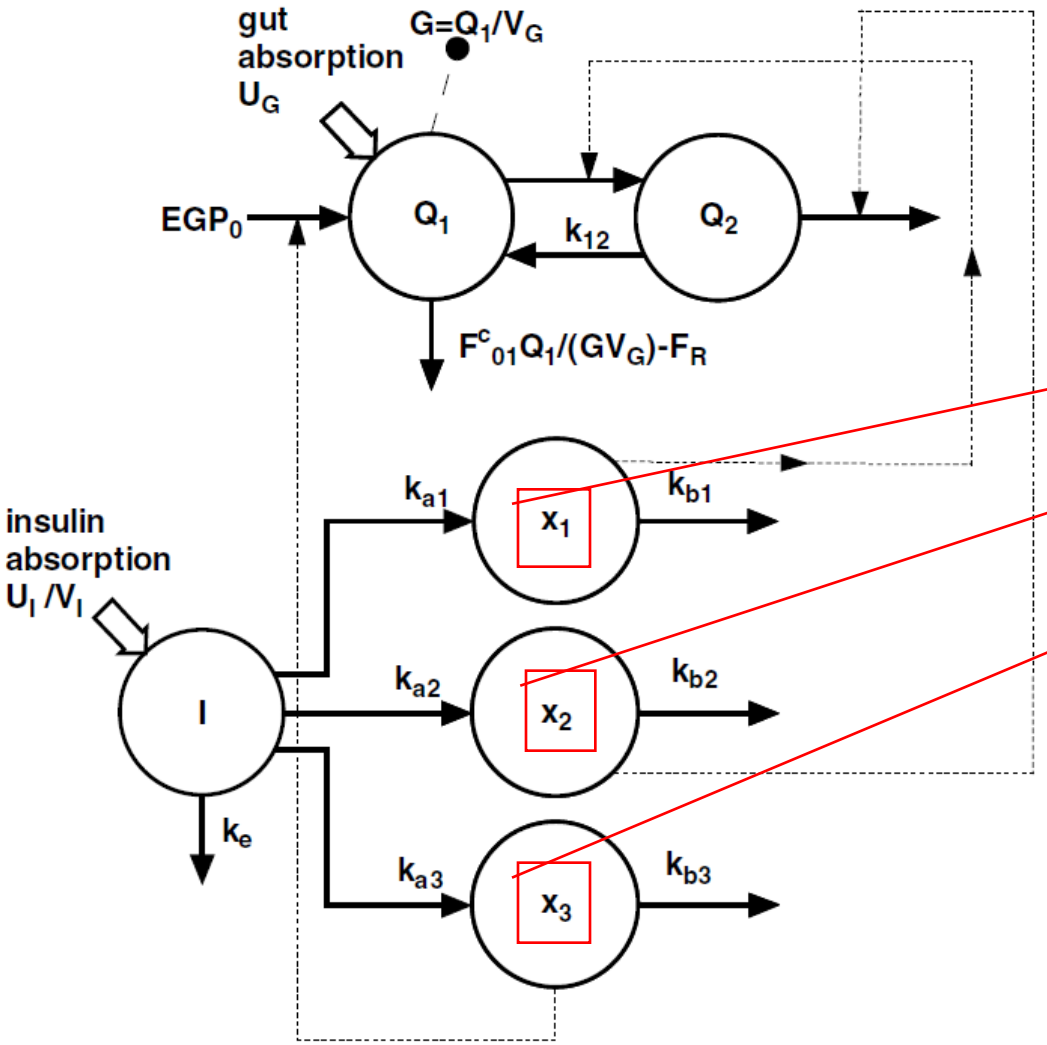

Insulin action on glucose transport

Insulin action on glucose disposal

Insulin action on glucose production

Glucose subsystem: Q_1, Q_2

Insulin subsystem: I

Model – External factors

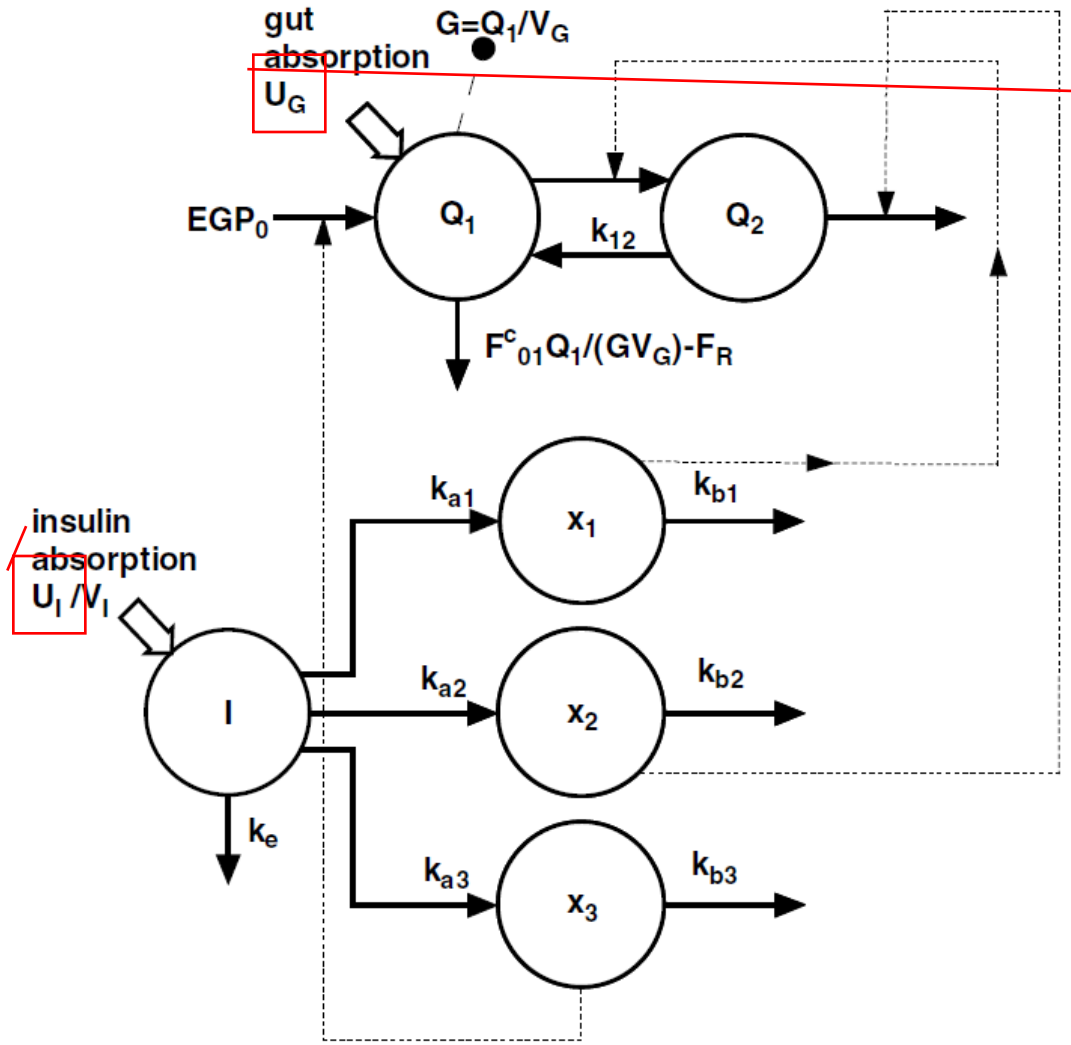

$U_{G(t)} \propto D_G$ where D_G is amount of carbohydrates digested

Model – Mathematics

$$U_G(t) = \frac{D_G A_G t\, e^{-t/t_{\max,G}}}{t^2_{\max,G}}$$

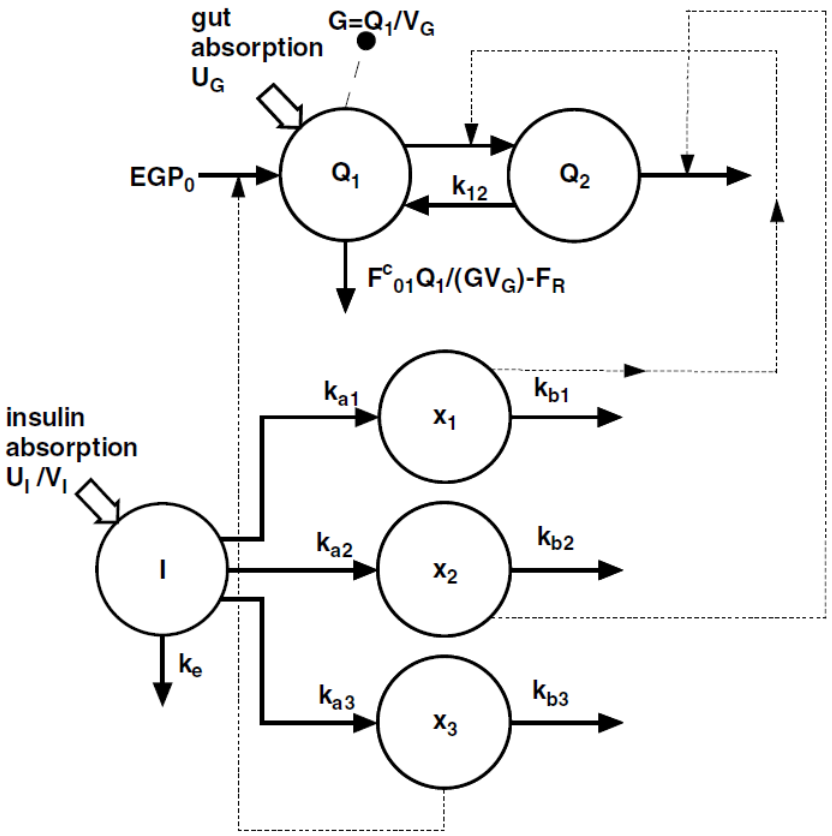

transport production

$$\frac{dQ_1(t)}{dt} = -\left[\frac{F^c_{01}}{V_G G(t)} + x_1(t)\right] Q_1(t) + k_{12} Q_2(t) - F_R + U_G(t) + EGP_0[1 - x_3(t)]$$

digestion

$$\frac{dQ_2(t)}{dt} = x_1(t) Q_1(t) - [k_{12} + x_2(t)] Q_2(t)\, y(t) G(t) = Q_1(t)/V_G$$

transport disposal

absorption

$$\frac{dI(t)}{dt} = \frac{U_I(t)}{V_I} - k_e I(t)$$

The model represents three actions of insulin on glucose kinetics

$$\frac{dx_1}{dt} = -k_{a1} x_1(t) + k_{b1} I(t) \quad \text{transport}$$

$$\frac{dx_2}{dt} = -k_{a2} x_2(t) + k_{b2} I(t) \quad \text{disposal}$$

$$\frac{dx_3}{dt} = -k_{a3} x_3(t) + k_{b3} I(t) \quad \text{production}$$

Parameters

Subject	k_{03}	k_{12}	k_{b1} (min^{-1})	k_{b2}	k_{b3}	S^f_{IT}† ($10^{-4} \times min^{-1}$ per mU/l)	S^f_{ID}†	S^f_{IE}† ($10^{-4} \times$ per mU/l)	F_{01} ($\mu mol \cdot kg^{-1} \cdot min^{-1}$)	V (l/kg)	EGP_0 ($\mu mol \cdot kg \cdot min^{-1}$	E
1	0.0075	0.0343	0.0031	0.0752	0.0472	29.4	0.9	401	12.1	0.18	14.8	
	(2)*	(6)	(15)	(267)	(17)	(4)	(24)	(2)	(3)	(1)	(3)	
2	0.0095	0.0871	0.0157	0.0231	0.0143	18.7	6.1	379	7.5	0.13	14.3	
	(2)	(8)	(12)	(27)	(6)	(11)	(8)	(2)	(2)	(1)	(2)	
3	0.0067	0.0863	0.0029	0.0495	0.0691	81.2	20.1	578	10.3	0.22	15.6	
	(2)	(14)	(28)	(21)	(21)	(12)	(6)	(4)	(3)	(2)	(2)	
4	0.0116	0.0968	0.0088	0.0302	0.0118	86.1	4.7	720	11.9	0.14	21.3	
	(2)	(5)	(10)	(45)	(10)	(7)	(14)	(4)	(3)	(2)	(5)	
5	0.0078	0.0390	0.0007	0.1631	0.0114	72.4	15.3	961	7.1	0.14	20.0	
	(2)	(6)	(69)	(57)	(10)	(11)	(13)	(3)	(7)	(1)	(5)	
6	0.0096	0.0458	0.0017	0.0689	0.0285	19.1	2.2	81	9.2	0.13	10.5	
	(2)	(5)	(14)	(16)	(12)	(4)	(5)	(5)	(2)	(1)	(2)	
Mean	0.0088	0.0649	0.0055	0.0683	0.0304	51.2	8.2	520	9.7	0.16	16.1	
±SE	0.0007	0.0115	0.0023	0.0207	0.0096	13.1	3.2	125	0.9	0.01	1.6	

Disposal of glucose due to insulin

Next steps

- Data – to construct uncertainty set
  - Patient uncertainty: physiological parameters of patients
  - Event uncertainty: meal / exercise event
- Optimization
  - Recall $\min_{<i_1,\dots,i_T>} J(\, M(< i_1, \dots, i_T >, D)\,)$
  - Transform to multi-stage optimization:

$$\min_{i_1}. \max_{d_1}. \min_{i_2}. \max_{d_2} \dots \min_{i_T}. \max_{d_T} \; J(\, M(< i_1, \dots, i_T >, D)\,)$$

Challenge

- Modeling and Constructing uncertainty
  - Representation
  - Learning from data
- Optimization tractability